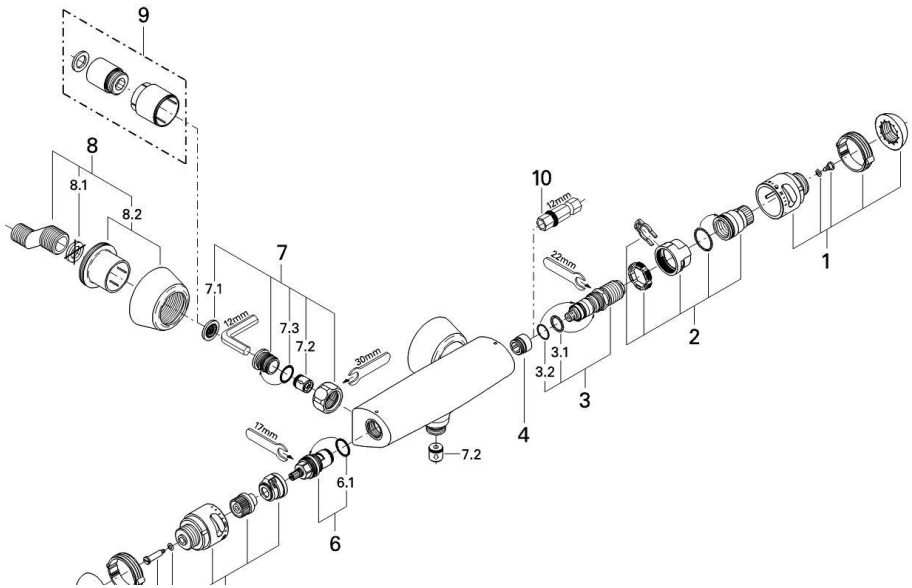


| | | |
|---|---|---|
| 1 | Instelknop | 47544IP0 |
| 2 | Regelmoer + aanslagring | 47441000 |
| 3 | Thermo-element 3/8" | 47349000 |
| 3.1 | O-Ring Ø15 x Ø2,5 | 0012300M |
| 3.2 | O-Ring Ø16 x Ø1,25 | 0122500M |
| 4 | Zitting | 2406000 |
| 5 | Greep met spaarknop | 47546IP0 |
| 6 | Keramisch bovendeel 1/2" | 45346000 |
| 6.1 | O-Ring Ø18,2 x Ø1,7 | 0392400M |
| 7 | Terugslagklep | 47189000 |
| 7.1 | Vuilfilter | 0726400M |
| 7.2 | Terugslagklep | 8565000 |
| 7.3 | O-Ring Ø17 x Ø2 | 0305500M |
| 8 | S-koppeling | 12058000 |
| 8.1 | Dichting | 0138600M |
| 8.2 | Rozet | 45545000 |
| 9 | Verlengset, 30 mm | 46238000 |
| 10 | Pijpsleutel | 19070000 |